Genesis Top-Mount Indoor

GENESIS TOP-MOUNT INDOOR

HB16
8000 BTU/Hr.
2051 Watt

MHB11
2200-4000 BTU/Hr.
645-1172 Watt

INDUSTRY STANDARDS

UL/cUL Listed; Type 12; File No. SA6453
UR/cUR Recognized

Maintains U/cUL Type 12 rating when properly installed on a UL/cUL Type 12 enclosure.
UR/cUR Recognized on select models, reference performance data tables.
CE
EAC

APPLICATION

- Industrial automation
- Package handling equipment
- Security and defense systems
- Ideal for use where there is little or no clearance around the enclosure

FEATURES

- Robust reciprocating compressor
- R134a and R407c earth-friendly refrigerant
- Models for 115, 230 and 460 single-phase VAC power input
- UL Listed or Recognized to save customers time and money with agency approvals
- Operating temperature range from 50 F/10 C to 125 F/52 C
- Attractive industrial design with minimal use of visible fasteners
- Reliable mechanical thermostat located behind the filter of the unit
- Low-carbon mild-steel sheet-metal cover for rugged factory environments
- Cleanable, reusable aluminum mesh filter protects coils for maximum cooling performance
- Mounting hardware, gaskets and user manual furnished with the unit
- Every unit functionally tested before shipping
- Standard Indoor Air Conditioner models also include:
  - Electro-Mechanical Thermostat
  - Surge Suppressor
  - Condensate Management System On MHB11 models

FINISH

- RAL 7042 gray, semi-gloss powder-coat paint standard
- Other colors and textures available

OPTIONS

- Thermostat Malfunction Package
- Special Voltage Package
  * Consult the factory for availability and catalog number

NOTES

Visit www.PentairProtect.com to download 2D and 3D CAD drawings into the overall design of your electrical system.

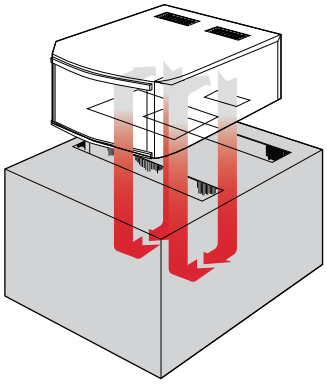

Top-Mount to Enclosure

C-NET INDUSTRIAL LTD. | +44(0)121 544 8608 | INFO@CNET-IS.CO.UK | WWW.CNET-IS.CO.UK

Performance Data MHB11 Models 2200 BTU/Hr. (645 Watt)

CATALOG NUMBER	MHB110216G306	MHB110226G306	MHB110246G400
COOLING PERFORMANCE			
Nominal:			
BTU/Hr.	**2200/2200**	**2200/2200**	**2200/2200**
Watts	**645/645**	**645/645**	**645/645**
Refrigerant	R-134A	R-134A	R-134A
Refrigerant Charge (ounces/grams)	11/312	11/312	11/312
Operating Temperature Range:			
Maximum (°F/°C)	125/52	125/52	125/52
Minimum (°F/°C)	50/10	50/10	50/10
Airflow at 0 Static Pressure:			
Internal loop 50 Hz (CFM / m^3/hr.)	158/268	170/289	170/289
External loop 50 Hz (CFM / m^3/hr.)	222/377	218/370	218/370
Internal loop 60 Hz (CFM / m^3/hr.)	177/301	192/326	192/326
External loop 60 Hz (CFM / m^3/hr.)	252/428	245/416	245/416
ELECTRICAL DATA			
Rated Voltage	**115**	**220/230**	**440/460V 1PH**
Frequency (Hz)	50/60	50/60	50/60
Operating Range	+/- 10%	+/- 10%	+/- 10%
Max. Power Consumption (W at 50/60 Hz)	1127/1035	1210/1058	1320/1150
Max. Nominal Current (A at 50/60 Hz)	9.8/9.0	5.5/4.6	3.0/2.5
Starting Current (A)	28	14.4	7.4
Agency Approvals	UL/cUL Listed CE EAC Others available upon request		cUR Recognized CE EAC
Power Input Description	6-ft. cord with NEMA 5-15 plug	6-ft. cord with NEMA 6-15 plug	6-ft. cord with wire leads
ENCLOSURE PROTECTION			
UL Type	Type 12 standard		
CONTROLLER			
Description	Basic mechanical thermostat		
Thermostat Location	Behind filter		
Factory Thermostat Setting (°F/°C)	80/27		
SOUND LEVEL			
At 1.5 Meters	62 dB(A)		
UNIT CONSTRUCTION			
Material	Mild steel sheet metal standard Stainless steel optional		
Finish	RAL 7042 gray, semi-gloss powder-coat paint standard		
UNIT DIMENSIONS			
Height (in./mm)	10.25/260	10.25/260	10.25/260
Width (in./mm)	17/432	17/432	17/432
Depth (in./mm)	21.08/535	21.08/535	21.08/535
Weight (lb./kg)	90/41	90/41	110/50

C-NET INDUSTRIAL LTD. | +44(0)121 544 8608 | INFO@CNET-IS.CO.UK | WWW.CNET-IS.CO.UK

Performance Data MHB11 Models 4000 BTU/Hr. (1172 Watt)

CATALOG NUMBER	MHB110416G307	MHB110426G306	MHB110446G400
COOLING PERFORMANCE			
Nominal:			
BTU/Hr.	**3300/4000**	**3300/4000**	**3300/4000**
Watts	**967/1172**	**967/1172**	**967/1172**
Refrigerant	R-134A	R-134A	R-134A
Refrigerant Charge (ounces/grams)	13/369	13/369	13/369
Operating Temperature Range:			
Maximum (°F/°C)	125/52	125/52	125/52
Minimum (°F/°C)	50/10	50/10	50/10
Airflow at 0 Static Pressure:			
Internal loop 50 Hz (CFM / m^3/hr.)	158/268	170/289	170/289
External loop 50 Hz (CFM / m^3/hr.)	222/377	218/370	218/370
Internal loop 60 Hz (CFM / m^3/hr.)	177/301	192/326	192/326
External loop 60 Hz (CFM / m^3/hr.)	252/428	245/416	245/416
ELECTRICAL DATA			
Rated Voltage	**110/115**	**220/230**	**440/460V 1PH**
Frequency (Hz)	50/60	50/60	50/60
Operating Range	+/- 10%	+/- 10%	+/- 10%
Max. Power Consumption (W at 50/60 Hz)	1617/1564	1760/1725	1936/1886
Max. Nominal Current (A at 50/60 Hz)	14.7/13.6	8.0/7.5	4.4/4.1
Starting Current (A)	48	23	12
Agency Approvals	UL/cUL Listed CE EAC Others available upon request		cUR Recognized CE EAC
Power Input Description	6-ft. cord with NEMA 5-20 plug	6-ft. cord with NEMA 6-15 plug	6-ft. cord with wire leads
ENCLOSURE PROTECTION			
UL Type	Type 12 standard		
CONTROLLER			
Description	Basic mechanical thermostat		
Thermostat Location	Behind filter		
Factory Thermostat Setting (°F/°C)	80/27		
SOUND LEVEL			
At 1.5 Meters	62 dB(A)		
UNIT CONSTRUCTION			
Material	Mild steel sheet metal standard Stainless steel optional		
Finish	RAL 7042 gray, semi-gloss powder-coat paint standard		
UNIT DIMENSIONS			
Height (in./mm)	10.25/260	10.25/260	10.25/260
Width (in./mm)	17/432	17/432	17/432
Depth (in./mm)	21.08/535	21.08/535	21.08/535
Weight (lb./kg)	108/49	108/49	128/58

C-NET INDUSTRIAL LTD. | +44(0)121 544 8608 | INFO@CNET-IS.CO.UK | WWW.CNET-IS.CO.UK

MHB11 Models 2200-4000 BTU/Hr. (645-1172 Watt)

NOTE:
1. MOUNTING GASKET SUPPLIED (NOT SHOWN)
2. UNITS: in. [mm]
3. CUTOUT DIMENSIONS FOR STANDARD UNITS ONLY

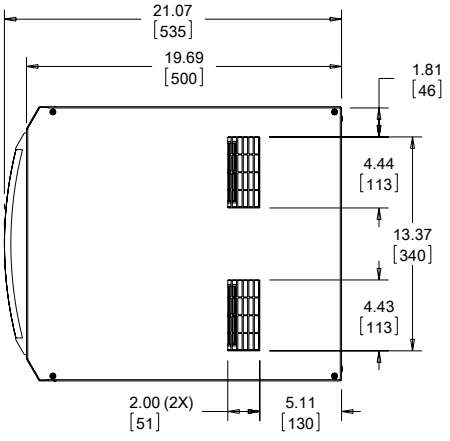

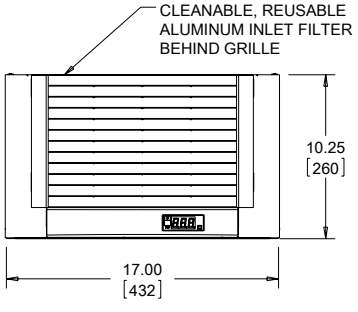

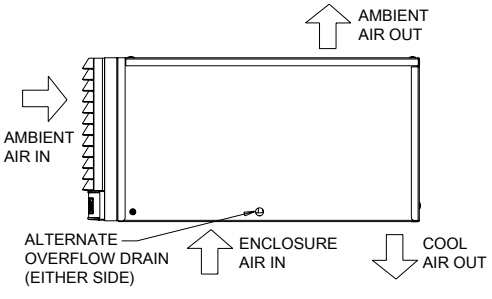

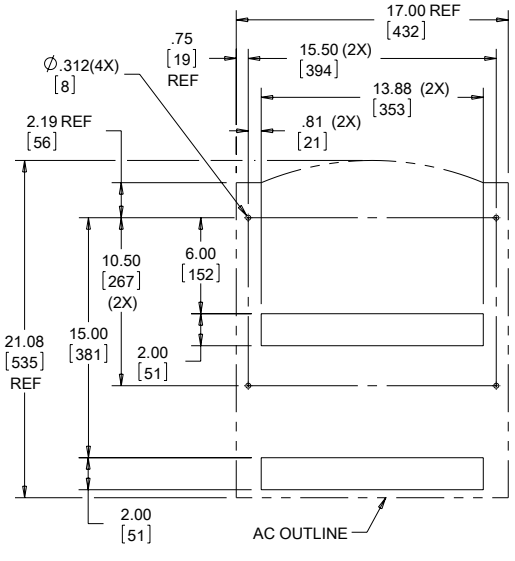

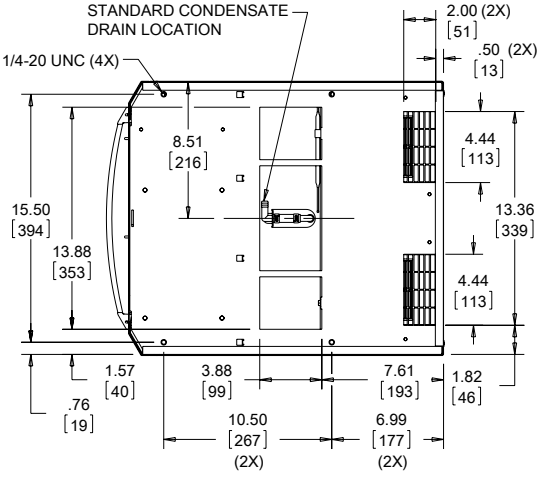

Cutout Dimensions

Visit nVent.com/HOFFMAN to download 2D and 3D CAD drawings into the overall design of your electrical system.

C-NET INDUSTRIAL LTD. | +44(0)121 544 8608 | INFO@CNET-IS.CO.UK | WWW.CNET-IS.CO.UK

Performance Data HB16 Models 8000 BTU/Hr. (2051 Watt)

MODEL NUMBER			
Indoor Model	HB160816G040	HB160826G040	HB160846G040
COOLING PERFORMANCE			
Nominal:			
BTU/Hr.	**7000/8000**	**7000/8000**	**7000/8000**
Watts	**2051/2344**	**2051/2344**	**2051/2344**
At 125 F/125 F (52 C/52 C):			
BTU/Hr. (50/60 Hz)	6975/8137	7075/8133	7075/8133
Watts (50/60 Hz)	2044/2385	2073/2384	2073/2384
At 95 F/95 F (35 C/35 C):			
BTU/Hr. (50/60 Hz)	6959/8236	6958/7774	6958/7774
W (50/60 Hz)	2039/2414	2039/2278	2039/2278
Refrigerant	R-407C	R-407C	R-407C
Refrigerant Charge (ounces/grams)	24/680	24/680	24/680
Operating Temperature Range:			
Maximum (°F/°C)	125/52	125/52	125/52
Minimum (°F/°C)	50/10	50/10	50/10
ELECTRICAL DATA			
Rated Voltage	**115**	**230**	**460**
Frequency (Hz)	50/60	50/60	50/60
Operating Range	+/- 10%	+/- 10%	+/- 10%
Max. Power Consumption (W at 50/60 Hz)	1822/2223	1785/2105	2162
Max. Nominal Current (A at 50/60 Hz)	18.7/20.4	8.5/9.3	4.3/4.7
Starting Current (A)	67	29	15
Agency Approvals	UL/cUL Listed CE EAC		
Power Input Description	6-ft. cord with NEMA 5-20 plug	6-ft. cord with NEMA 5-20 plug	6-ft. cord with NEMA L8-20 plug
ENCLOSURE PROTECTION			
UL Type	Type 12 Standard		
CONTROLLER			
Description	Basic Mechanical Thermostat		
Thermostat Location	Enclosure Side on All Base Models		
Factory Thermostat Setting (°F/°C)	80/27	80/27	80/27
UNIT CONSTRUCTION			
Material	Galvanized Sheet Metal Standard (Optional: Stainless Steel)		
Finish	RAL 7042 gray, semi-gloss powder-coat paint standard Other colors and textures available		
UNIT DIMENSIONS			
Height (in./mm)	15.25/387.35	15.25/387.35	15.25/387.35
Width (in./mm)	17.00/431.80	17.00/431.80	17.00/431.80
Depth (in./mm)	25.19/639.76	25.19/639.76	25.19/639.76
Weight (lb./kg)	145.00/69.78	145.00/69.78	170.00/77.00

C-NET INDUSTRIAL LTD. | +44(0)121 544 8608 | INFO@CNET-IS.CO.UK | WWW.CNET-IS.CO.UK

HB16 Models 8000 BTUs/Hr. (2051 Watts)

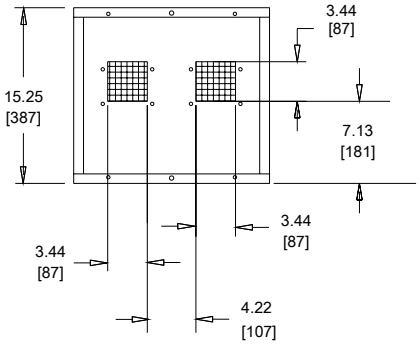

Rear View

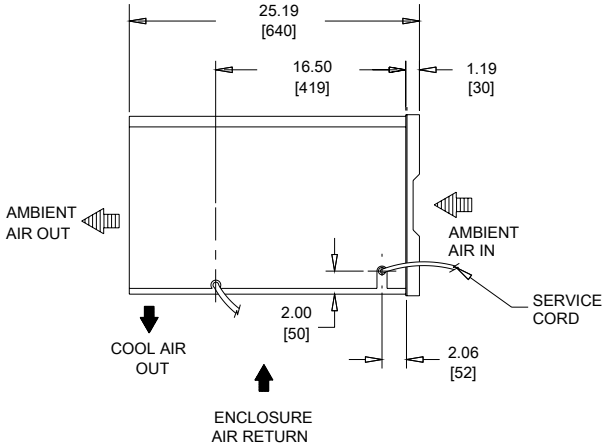

Side View

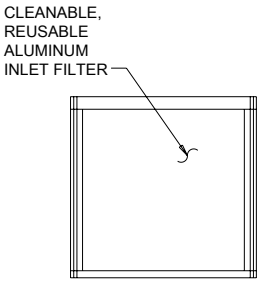

Front View

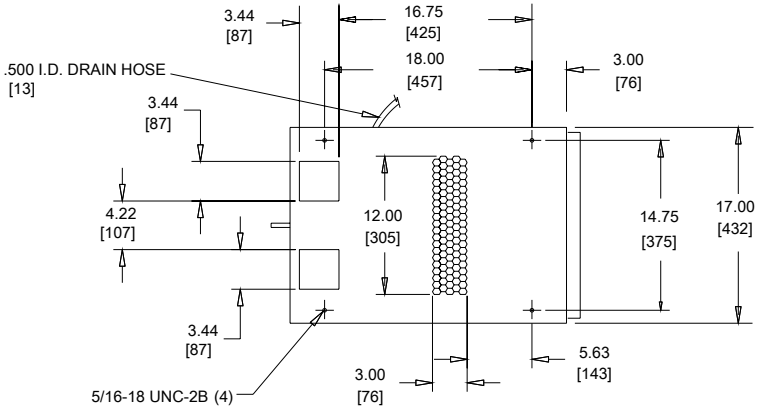

Bottom View

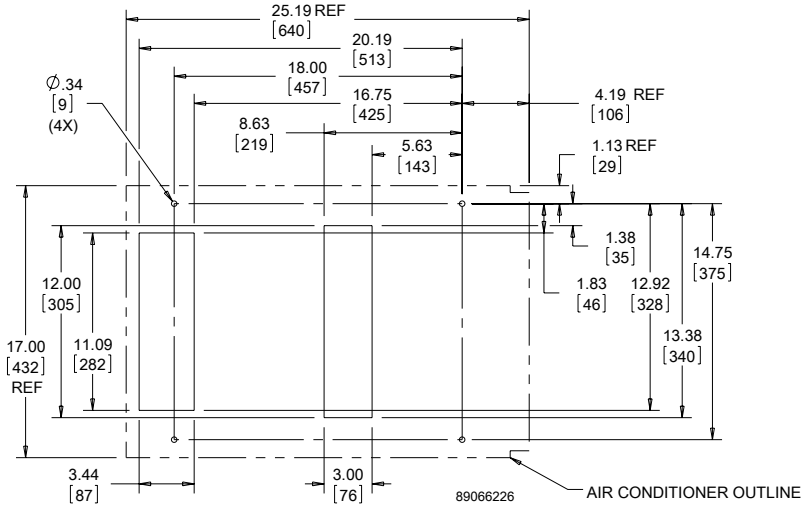

Cutout

Visit nVent.com/HOFFMAN to download 2D and 3D CAD drawings into the overall design of your electrical system.

C-NET INDUSTRIAL LTD. | +44(0)121 544 8608 | INFO@CNET-IS.CO.UK | WWW.CNET-IS.CO.UK

+44 (0)121 544 6808 | **info@cnet-is.co.uk**

C-NET Industrial Solutions Limited
Suite 12, Sandwell Business Centre
Oldbury Road
Smethwick
B66 1NN
United Kingdom